Wall mount S360, 8260, 8x5x

S360-444B

K&M 24478-018-55

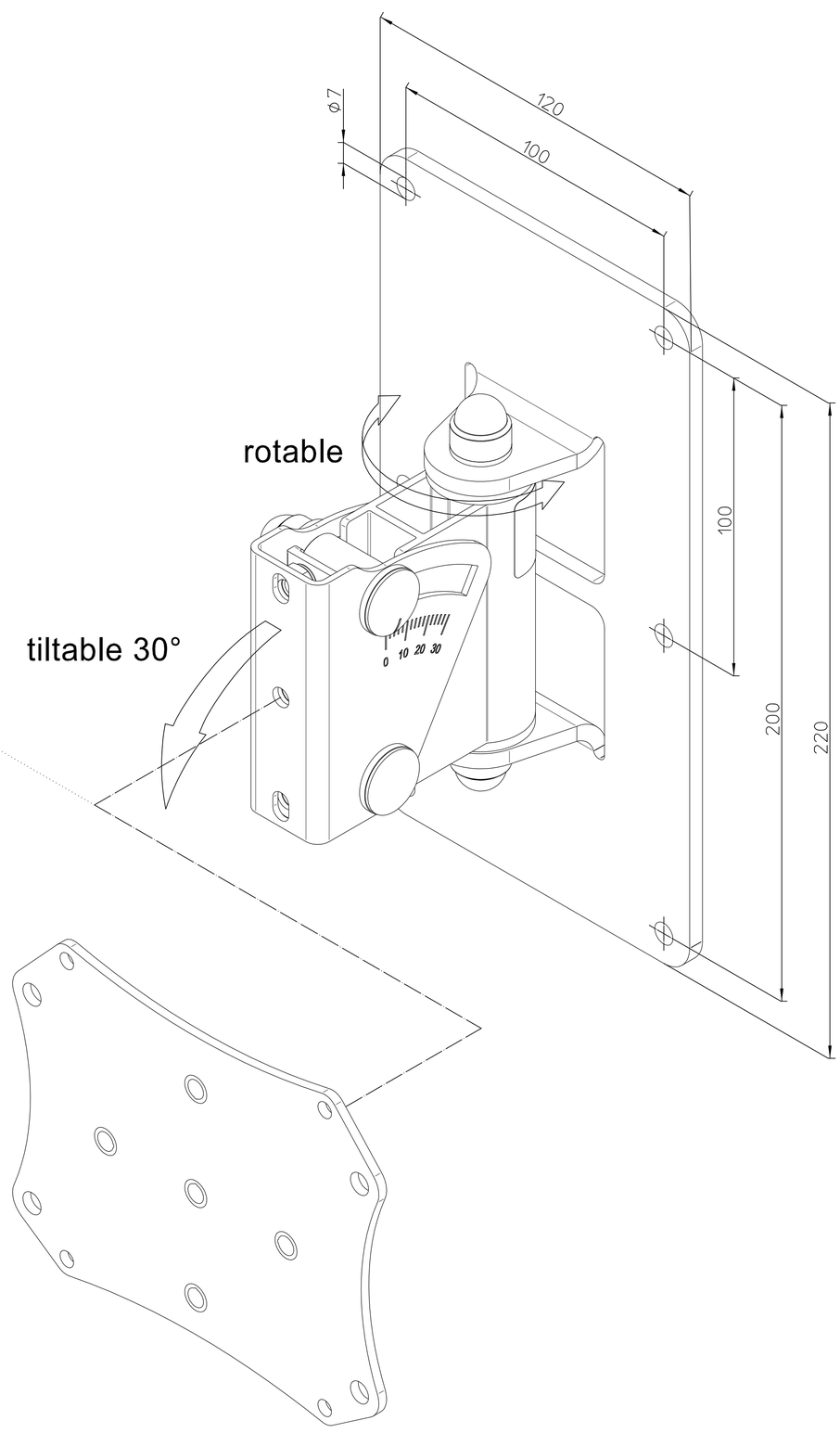

Adapter plate for:

GENELEC 8260A

GENELEC 8x5x

Enables horizontal and vertical position of the 8351